NO. 235

AWS D17.1.2001
QUALIFICATION TEST RECORD

Name: Barclay Elliott
Job number: 59780
Part number: D206-642-541
Description: 206 skid tube
Welding Process: Tig[✓] Mig[ ]
Base materiel: Aluminium
Current: AC[✓] DC[ ]

TEST REQUIREMENTS AND RESULTS

Visual:	pass[✓]	fail[ ]
Penetration:	pass[✓]	fail[ ]

UNACCEPTABLE

Cracks:	pass[✓]	fail[ ]
Undercut:	pass[✓]	fail[ ]
Pin holes:	pass[✓]	fail[ ]
Overlap (cold lap)	pass[✓]	fail[ ]
Porosity (surface):	pass[✓]	fail[ ]
Coloration:	pass[✓]	fail[ ]

Qualifier [signature] **Date of Test Coupon** 10.07.01

Welder Barclay Elliott **Date of Test Coupon** 10-07-01

The above named individual is qualified in accordance with AWS D17.1.2001 to weld

Dart Aerospace Ltd

W/O:		WORK ORDER CHANGES					
DATE	STEP	PROCEDURE CHANGE	By	Date	Qty	Approval Chief Eng / Prod Mgr	Approval QC Inspector

Part No: _____ **PAR #:** _____ **Fault Category:** _____ **NCR:** Yes No **DQA:** _____ **Date:** _____

Resolution: _____ **Disposition:** _____ **QA: N/C Closed:** _____ **Date:** _____

NCR:		WORK ORDER NON-CONFORMANCE (NCR)						
DATE	STEP	Description of NC Section A	Corrective Action Section B			Verification Section C	Approval Chief Eng	Approval QC Inspector
			Initial Chief Eng	Action Description Chief Eng	Sign & Date			

NOTE: Date & initial all entries

H:\fFORMS\Quality Assurance\approved QA\NCRWO RevE

DRAWING NO.	TITLE	REV. D	DART AEROSPACE USA, INC	D.E.O. NO.	SHEET NO.	SCALE
D3274	SKIDTUBE ASSEMBLY		ENGINEERING ORDER	D3274-D-1	SHEET 1 OF 1	NTS
DRAWN	CHECKED		MFG. APPR.	APPROVED	DE APPR.	
DATE 09.06.17	DATE 09.06.23		DATE 09/06/23	DATE 09/06/23	DATE 09.06.23	

LPS-3 IS NO LONGER USED DURING ASSEMBLY OF SKIDTUBE.

AMEND NOTE 8: "~~SPRAY INSIDE OF TUBE WITH A COAT OF LPS LABORATORIES 'LPS 3' AFTER FINISH AND INSTALLATION OF INSERTS.~~ COAT ALL EXPOSED FASTENERS WITH LPS LABORATORIES 'LPS PROCYON' AFTER FINAL ASSEMBLY, CLEAN EXCESS OFF POWDER COATING WITH MEK DEGREASER."

AMEND DETAIL F AS SHOWN:

w/o 6.06.07

DETAIL F: END FINISHING DETAIL

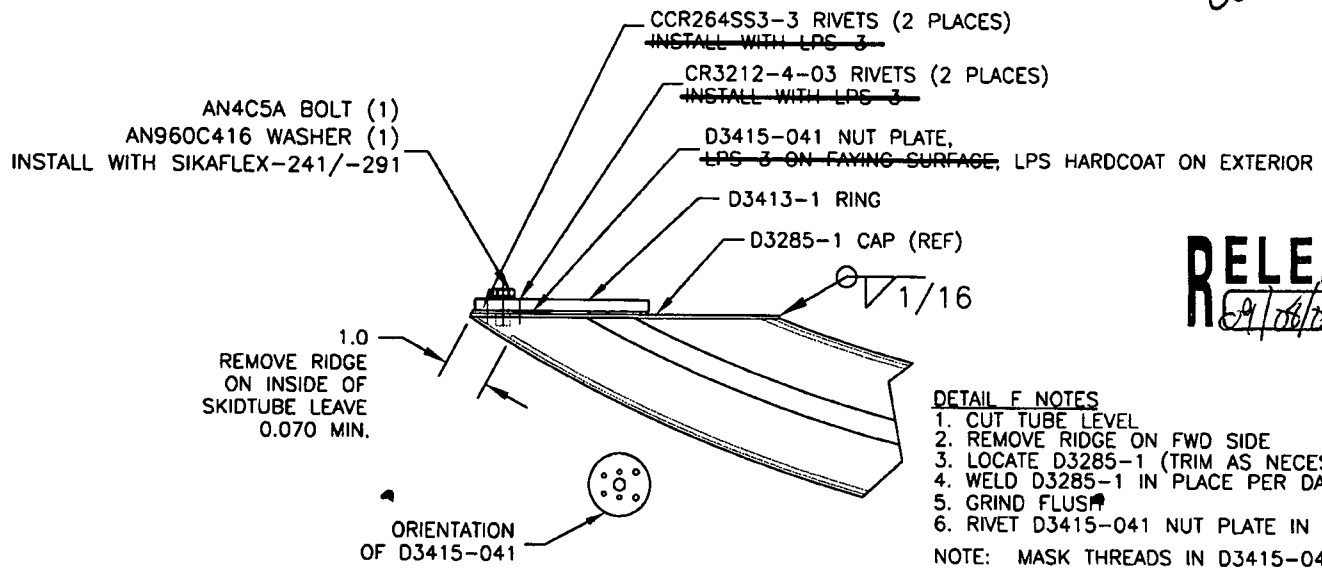

RELEASED 09/06/23

DETAIL F NOTES
1. CUT TUBE LEVEL
2. REMOVE RIDGE ON FWD SIDE
3. LOCATE D3285-1 (TRIM AS NECESSARY)
4. WELD D3285-1 IN PLACE PER DART QSI 004
5. GRIND FLUSH
6. RIVET D3415-041 NUT PLATE IN PLACE

NOTE: MASK THREADS IN D3415-041 PRIOR TO FINISH

Dart Aerospace Ltd

W/O:		WORK ORDER CHANGES					
DATE	STEP	PROCEDURE CHANGE	By	Date	Qty	Approval Chief Eng / Prod Mgr	Approval QC Inspector

Part No: _____ **PAR #:** _____ **Fault Category:** _____ **NCR:** Yes No **DQA:** _____ **Date:** _____

Resolution: _____ **Disposition:** _____ **QA: N/C Closed:** _____ **Date:** _____

NCR:		WORK ORDER NON-CONFORMANCE (NCR)						
DATE	STEP	Description of NC Section A	Corrective Action Section B			Verification Section C	Approval Chief Eng	Approval QC Inspector
			Initial Chief Eng	Action Description Chief Eng	Sign & Date			

NOTE: Date & initial all entries

H:\fFORMS\Quality Assurance\approved QA\NCRWO RevE

DETAIL A: DRILL DETAIL

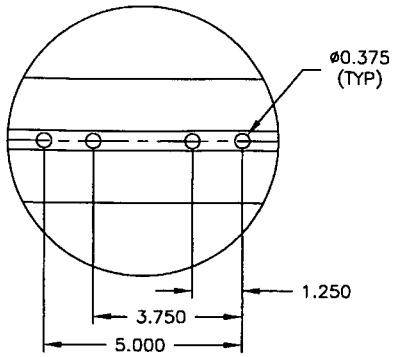

DETAIL B
FOR ø0.375 HOLES ONLY

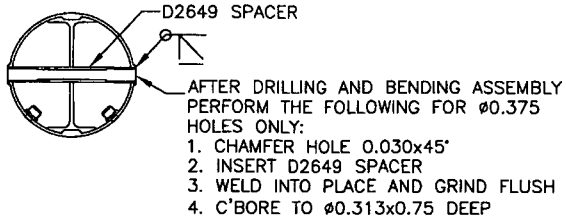

DETAIL C
FOR ø0.313 HOLES ONLY

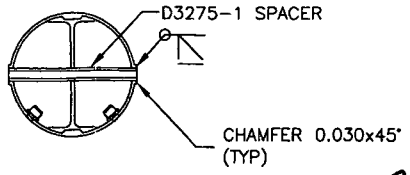

w/o 060607

DETAIL D

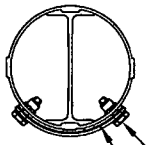

ALS7-1032-130 INSERT (1)
AN3C4A BOLT (1)
AN960C10L WASHER (1)
(78 PLACES)

GASKET/WEARSHOE/WEARPAD (REF)

DETAIL F: END FINISHING DETAIL

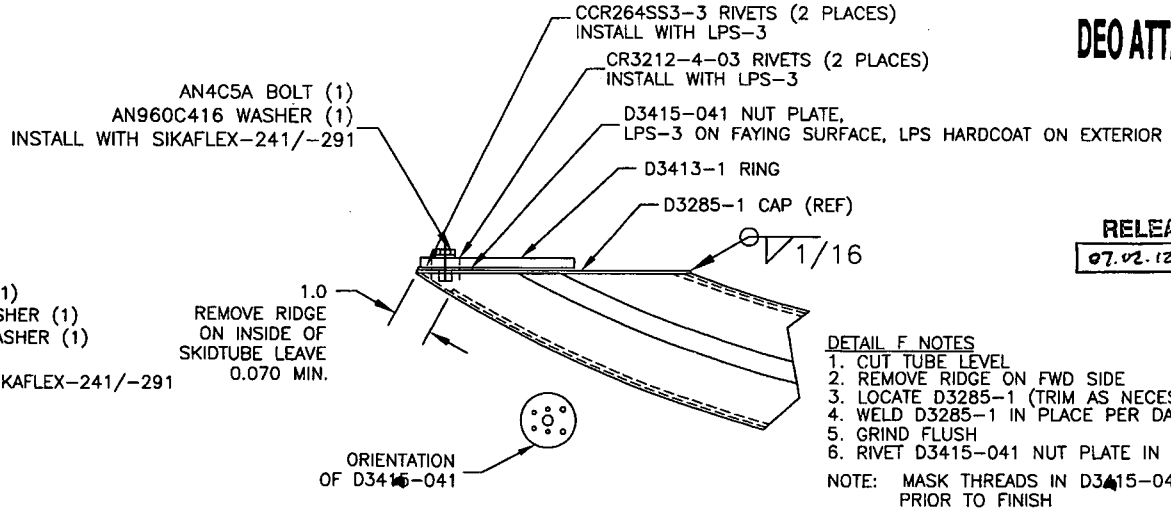

DEO ATTACHED

RELEASED
07.02.12

DETAIL F NOTES
1. CUT TUBE LEVEL
2. REMOVE RIDGE ON FWD SIDE
3. LOCATE D3285-1 (TRIM AS NECESSARY)
4. WELD D3285-1 IN PLACE PER DART QSI 004
5. GRIND FLUSH
6. RIVET D3415-041 NUT PLATE IN PLACE

NOTE: MASK THREADS IN D3415-041
PRIOR TO FINISH

DETAIL E

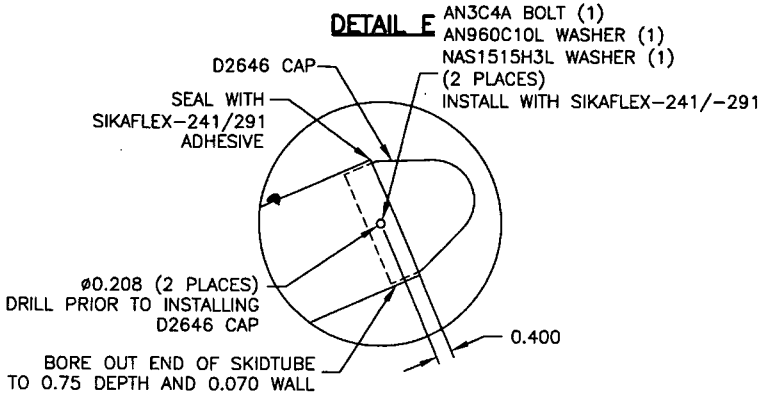

DESIGN: CP	DRAWN BY: PH	DART AEROSPACE USA, INC. PORT HADLOCK, WA	
CHECKED:	APPROVED:	DRAWING NO. D3274	REV. D SHEET 4 OF 4
DATE: 06.12.19		TITLE: SKIDTUBE ASSEMBLY	SCALE: 1:3

Dart Aerospace Ltd

W/O:		WORK ORDER CHANGES					
DATE	STEP	PROCEDURE CHANGE	By	Date	Qty	Approval Chief Eng / Prod Mgr	Approval QC Inspector

Part No: _____ PAR #: _____ Fault Category: _____ NCR: Yes No DQA: _____ Date: _____

Resolution: _____ Disposition: _____ QA: N/C Closed: _____ Date: _____

NCR:		WORK ORDER NON-CONFORMANCE (NCR)						
DATE	STEP	Description of NC Section A	Corrective Action Section B			Verification Section C	Approval Chief Eng	Approval QC Inspector
			Initial Chief Eng	Action Description Chief Eng	Sign & Date			

NOTE: Date & initial all entries

H:\fFORMS\Quality Assurance\approved QA\NCRWO RevE

DEO ATTACHED

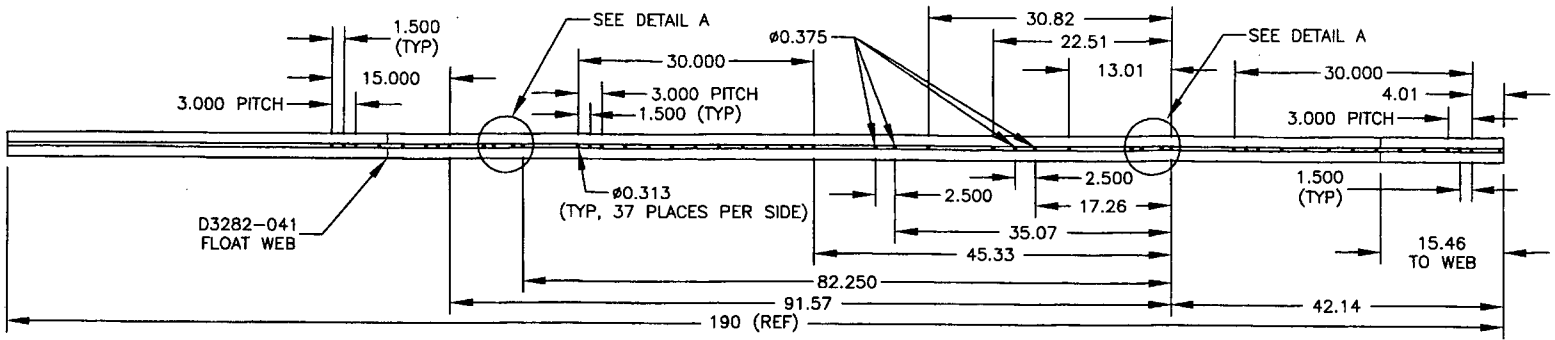

D3274-043 DRILLING/ASSEMBLY DETAIL

w/o 00607

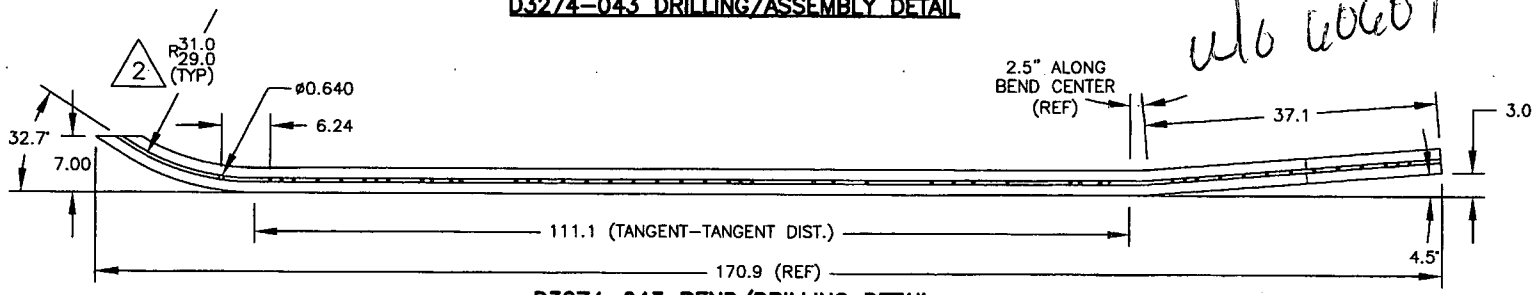

D3274-043 BEND/DRILLING DETAIL

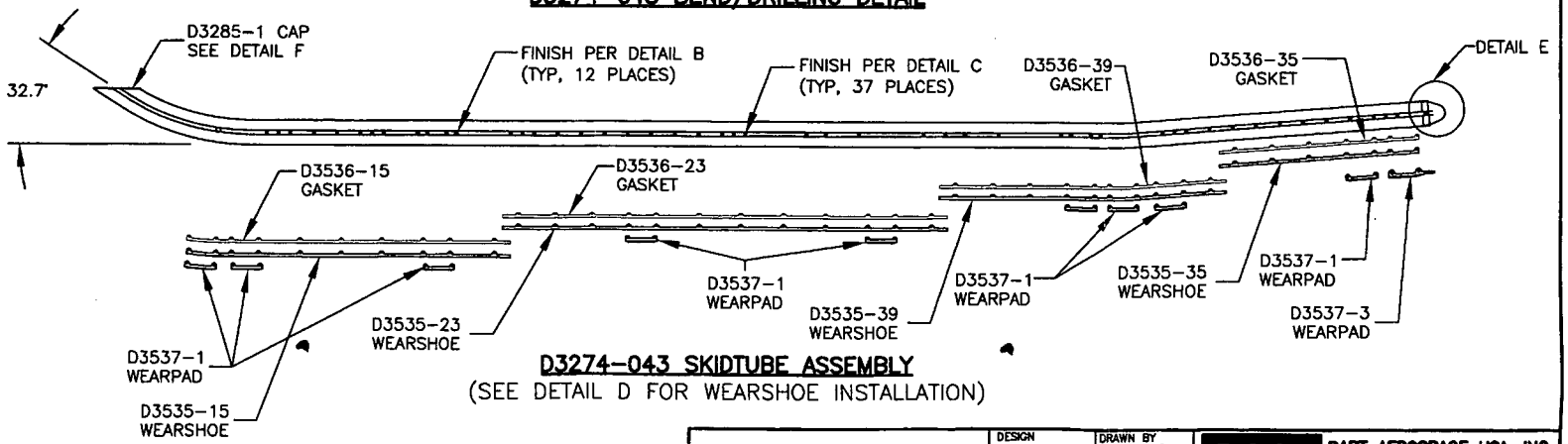

D3274-043 SKIDTUBE ASSEMBLY
(SEE DETAIL D FOR WEARSHOE INSTALLATION)

RELEASED
07.02.12

DESIGN: CP	DRAWN BY: PH	DART AEROSPACE USA, INC. PORT HADLOCK, WA	
CHECKED:	APPROVED:	DRAWING NO. D3274	REV. D SHEET 3 OF 4
DATE: 06.12.19		TITLE: SKIDTUBE ASSEMBLY	SCALE: 1:15

Dart Aerospace Ltd

W/O:		WORK ORDER CHANGES					
DATE	STEP	PROCEDURE CHANGE	By	Date	Qty	Approval Chief Eng / Prod Mgr	Approval QC Inspector

Part No: _____ **PAR #:** _____ **Fault Category:** _____ **NCR:** Yes No **DQA:** _____ **Date:** _____

Resolution: _____ **Disposition:** _____ **QA: N/C Closed:** _____ **Date:** _____

NCR:		WORK ORDER NON-CONFORMANCE (NCR)						
DATE	STEP	Description of NC Section A	Corrective Action Section B			Verification Section C	Approval Chief Eng	Approval QC Inspector
			Initial Chief Eng	Action Description Chief Eng	Sign & Date			

NOTE: Date & initial all entries

H:\fFORMS\Quality Assurance\approved QA\NCRWO RevE

ulb 40607

DEO ATTACHED

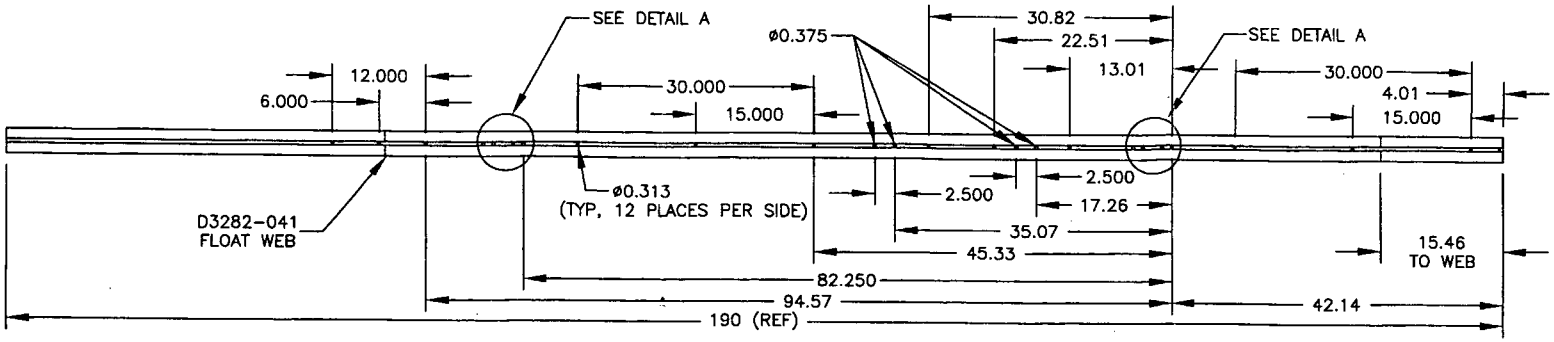

D3274-041 DRILLING/ASSEMBLY DETAIL

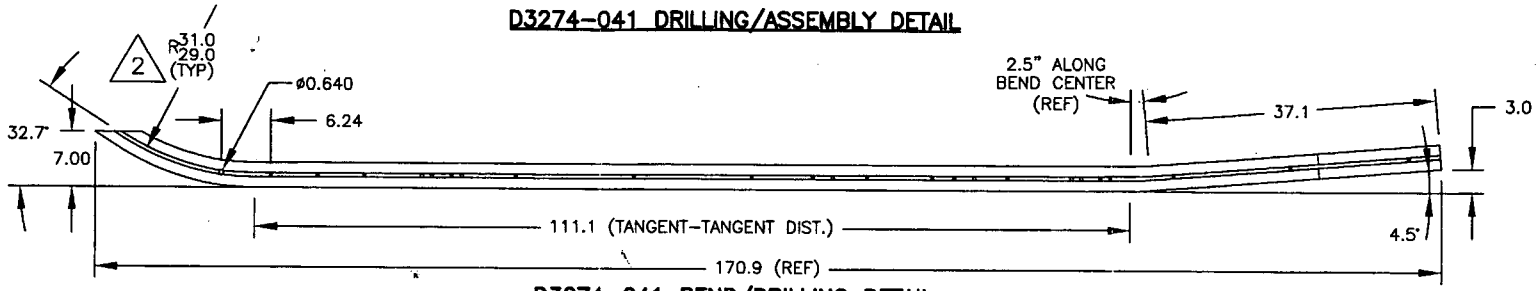

D3274-041 BEND/DRILLING DETAIL

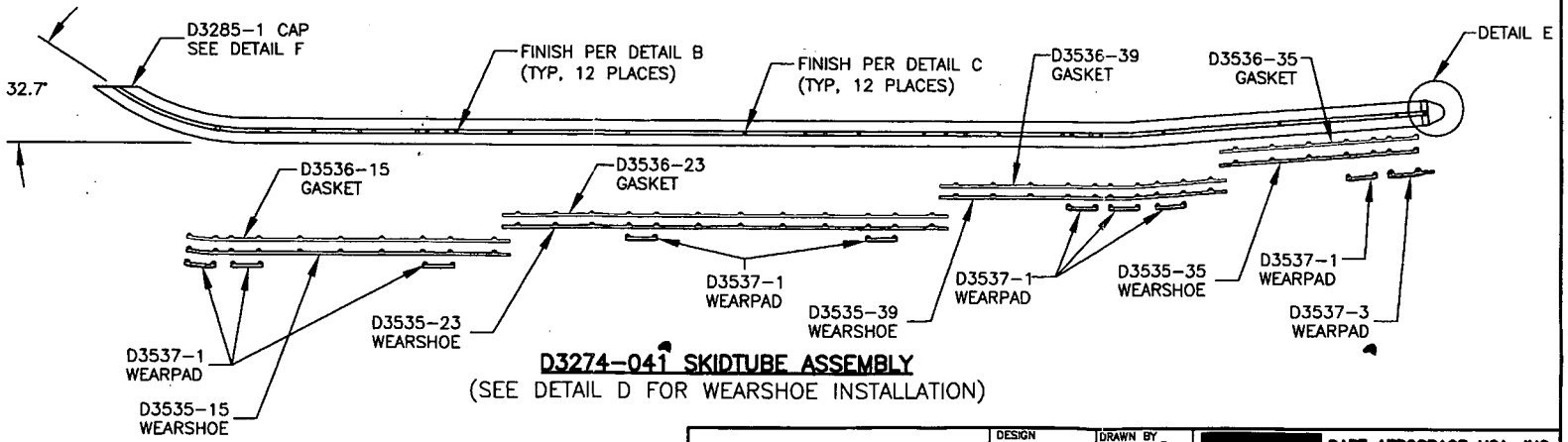

D3274-041 SKIDTUBE ASSEMBLY

(SEE DETAIL D FOR WEARSHOE INSTALLATION)

RELEASED
07.02.12

DESIGN: CP	DRAWN BY: PH	DART AEROSPACE USA, INC. PORT HADLOCK, WA	
CHECKED:	APPROVED:	DRAWING NO. D3274	REV. D SHEET 2 OF 4
DATE: 06.12.19		TITLE: SKIDTUBE ASSEMBLY	SCALE: 1:15

Dart Aerospace Ltd

W/O:		WORK ORDER CHANGES					
DATE	STEP	PROCEDURE CHANGE	By	Date	Qty	Approval Chief Eng / Prod Mgr	Approval QC Inspector

Part No: _____ **PAR #:** _____ **Fault Category:** _____ **NCR:** Yes No **DQA:** _____ **Date:** _____

Resolution: _____ **Disposition:** _____ **QA: N/C Closed:** _____ **Date:** _____

NCR:		WORK ORDER NON-CONFORMANCE (NCR)						
DATE	STEP	Description of NC Section A	Corrective Action Section B			Verification Section C	Approval Chief Eng	Approval QC Inspector
			Initial Chief Eng	Action Description Chief Eng	Sign & Date			

NOTE: Date & initial all entries

H:\fFORMS\Quality Assurance\approved QA\NCRWO RevE

SHOP COPY
RETURN TO
ENGINEERING
UNCONTROLLED COPY
SUBJECT TO
WITHOUT
WORK ORDER
NO. 6060

RELEASED
07.02.12
DEO ATTACHED

DESIGN	DRAWN BY	DART AEROSPACE USA, INC. PORT HADLOCK, WA	
CP	PH		
CHECKED	APPROVED	DRAWING NO. D3274	REV. D SHEET 1 OF 4
DATE 06.12.19		TITLE SKIDTUBE ASSEMBLY	SCALE NTS

A	04.03.15	NEW ISSUE
B	04.08.09	MOVE SADDLE HOLE: 42.14 WAS 42.76
C	05.03.16	ADD −043; NEW INSERTS
D	06.12.19	NEW INSERTS, SS WEARSHOE + GASKET

Qty -041	Qty -043	Part Number	Description
X		D3274-041	SKIDTUBE ASSEMBLY
	X	D3274-043	SKIDTUBE ASSEMBLY
1	1	D2600-1-240	EXTRUSION
1	1	D2646	AFT CAP
12	12	D2649	CROSS BOLT SPACER
12	37	D3275-1	CROSS BOLT SPACER
1	1	D3282-041	FLOAT WEB
1	1	D3285-1	CAP
1	1	D3413-1	RING
1	1	D3415-041	NUT PLATE
1	1	D3535-15	WEARSHOE
1	1	D3535-23	WEARSHOE
1	1	D3535-35	WEARSHOE
1	1	D3535-39	WEARSHOE
1	1	D3536-15	GASKET
1	1	D3536-23	GASKET
1	1	D3536-35	GASKET
1	1	D3536-39	GASKET
9	9	D3537-1	WEARPAD
1	1	D3537-3	WEARPAD
78	78	ALS7-1032-130	INSERT (or AKS4-1032-130, ALS4-1032-130, AELS-1032-130)
80	80	AN3C4A	BOLT
1	1	AN4C5A	BOLT
1	1	AN960C416	WASHER
80	80	AN960C10L	WASHER
2	2	CCR264SS3-3	RIVET
2	2	CR3212-4-03	RIVET
2	2	NAS1515H3L	WASHER

GENERAL NOTES:

1. TOLERANCES ARE PER DART QSI 018 UNLESS OTHERWISE NOTED.
2. DAMAGE TOLERANCE ON FWD BEND:
   THERE SHOULD BE NO VISIBLE WRINKLES IN THE BEND FROM THE GROUND TO A HEIGHT OF 7 INCHES ABOVE THE GROUND. IT IS ACCEPTABLE TO POLISH OUT GOUGES UP TO 0.020 DEEP IN THE BENT PORTION OF THE TUBE. A MAXIMUM REDUCTION IN DIAMETER OF 0.150" IS ACCEPTABLE IN THE BENT PORTION OF THE TUBE.
3. ALL HOLES DRILLED ON CENTERLINES.
4. BOND D3282-041 FLOAT WEB INTO D3274-1/-3 OUTER TUBE WITH NON-STRUCTURAL SIKAFLEX-241/291 ADHESIVE PER DART QSI 015. ENSURE HOLES LINE-UP.
5. WELDING TO BE DONE PER DART QSI 004.
6. FINISH: - ACID ETCH, ALODINE ASSEMBLY PER DART QSI 005 4.1
   - POWDER COAT WHITE (REF. 4.3.5.1) PER DART QSI 005 4.3
7. DRILL Ø0.297 HOLES FOR ALS7-1032-130 INSERTS USING DT3274-1T2 BEFORE FINISH. INSTALL ALS7-1032-130 INSERTS AFTER FINISH. SEAL WEARSHOE BOLTS WITH SIKAFLEX -241/-291.
8. SPRAY INSIDE OF TUBE WITH A COAT OF LPS LABORATORIES "LPS-3" AFTER FINISH AND INSTALLATION OF INSERTS. COAT ALL EXPOSED FASTENERS WITH LPS LABORATORIES "LPS PROCYON" AFTER FINAL ASSEMBLY, CLEAN EXCESS OFF POWDER COATING WITH MEK DEGREASER.

Dart Aerospace Ltd

W/O:		WORK ORDER CHANGES					
DATE	STEP	PROCEDURE CHANGE	By	Date	Qty	Approval Chief Eng / Prod Mgr	Approval QC Inspector

Part No: _____ **PAR #:** _____ **Fault Category:** _____ **NCR:** Yes No **DQA:** _____ **Date:** _____

Resolution: _____ **Disposition:** _____ **QA: N/C Closed:** _____ **Date:** _____

NCR:		WORK ORDER NON-CONFORMANCE (NCR)						
DATE	STEP	Description of NC Section A	Corrective Action Section B			Verification Section C	Approval Chief Eng	Approval QC Inspector
			Initial Chief Eng	Action Description Chief Eng	Sign & Date			

NOTE: Date & initial all entries

H:\fFORMS\Quality Assurance\approved QA\NCRWO RevE

Picklist Print

Thursday, July 15, 2010 10:24:12 AM

Work Order ID: 60607

Parent Item: D206-642-541

Parent Item Name: Replacement Skidtube

Start Date: 7/15/2010 **Required Date:** 7/22/2010

Start Qty: 1.00 **Required Qty:** 1.00

AN4C5A BOLT	Purchased	No	270	Each	513.0000	1	1	M 10/09/08

Location	Loc Qty	Loc Code	
ST346	513		
110552	13		YI
H2243	500		

D2646 Aft Cap	Manufactured	No	270	Each	94.0000	1	1	M 10/09/08

Location	Loc Qty	Loc Code	
FP-4	85		
57332	85		YI
FP6	9		
52663	9		

D3413-1 Ring	Manufactured	No	270	Each	31.0000	1	1	M 10/09/08

Location	Loc Qty	Loc Code	
ST473	31	B6 1322	YI
51586	1		
53446	23		
58524	7		

Dart Aerospace Ltd

W/O:		WORK ORDER CHANGES					
DATE	STEP	PROCEDURE CHANGE	By	Date	Qty	Approval Chief Eng / Prod Mgr	Approval QC Inspector

Part No: _____ **PAR #:** _____ **Fault Category:** _____ **NCR:** Yes No **DQA:** _____ **Date:** _____

Resolution: _____ **Disposition:** _____ **QA: N/C Closed:** _____ **Date:** _____

NCR:		WORK ORDER NON-CONFORMANCE (NCR)						
DATE	STEP	Description of NC Section A	Corrective Action Section B			Verification Section C	Approval Chief Eng	Approval QC Inspector
			Initial Chief Eng	Action Description Chief Eng	Sign & Date			

NOTE: Date & initial all entries

H:\fFORMS\Quality Assurance\approved QA\NCRWO RevE

Picklist Print

Thursday, July 15, 2010 10:24:12 AM

Work Order ID: 60607

Parent Item: D206-642-541

Parent Item Name: Replacement Skidtube

Start Date: 7/15/2010 **Required Date:** 7/22/2010

Start Qty: 1.00 **Required Qty:** 1.00

AN960C10L	NAS1149C0332R	Purchased	No	270	Each	0.0000	80	80	
washer									
AN960C416	NAS1149C0463R	Purchased	No	270	Each	113.0000	1	1	
washer									
D3672-1		Manufactured	No	270	Each	1,033.000	2	2	
Phenolic Washer									
AN3C4A		Purchased	No	270	Each	1,559.000	80	80	
BOLT									

M115000 x80 10/09/08

10/09/08

Location	Loc Qty	Loc Code	
ST346	113		
100993	113		x1

10/09/08

Location	Loc Qty	Loc Code	
ST077	1033		
51674	33		
52505	1000		x2

10/09/08

Location	Loc Qty	Loc Code	
ST350	1559		
114103	501		
114108	14		
114416	12	M115438	
114523	2		x80
114859	30		
114941	1000		

Dart Aerospace Ltd

W/O:		WORK ORDER CHANGES					
DATE	STEP	PROCEDURE CHANGE	By	Date	Qty	Approval Chief Eng / Prod Mgr	Approval QC Inspector

Part No: _____ **PAR #:** _____ **Fault Category:** _____ **NCR:** Yes No **DQA:** _____ **Date:** _____

Resolution: _____ **Disposition:** _____ **QA: N/C Closed:** _____ **Date:** _____

NCR:		WORK ORDER NON-CONFORMANCE (NCR)						
DATE	STEP	Description of NC Section A	Corrective Action Section B			Verification Section C	Approval Chief Eng	Approval QC Inspector
			Initial Chief Eng	Action Description Chief Eng	Sign & Date			

NOTE: Date & initial all entries

H:\fFORMS\Quality Assurance\approved QA\NCRWO RevE

Picklist Print

Thursday, July 15, 2010 10:24:12 AM

Work Order ID: 60607

Parent Item: D206-642-541

Parent Item Name: Replacement Skidtube

Start Date: 7/15/2010 **Required Date:** 7/22/2010

Start Qty: 1.00 **Required Qty:** 1.00

D3535-39 Wearshoe	Manufactured	No	270	Each	8.0000	1	1	M 10/09/08

Location		Loc Qty	Loc Code	
FP18		8		
	58214	8		YI

D3535-23 Wearshoe	Manufactured	No	270	Each	5.0000	1	1	M 10/09/08

Location		Loc Qty	Loc Code	
FP21		5		YI
	57730 B608641	5		

D3537-3 Wearpad	Manufactured	No	270	Each	20.0000	1	1	M 10/09/08

Location		Loc Qty	Loc Code	
FP17		4		
	57512	4		
FP19		16		
	59711	16		YI

D3537-1 Wearpad	Manufactured	No	270	Each	44.0000	9	9	M 10/09/08

Location		Loc Qty	Loc Code	
FP		1	BG1201	YG
	55465	1		
FP17		43		
	57713	3		
	59593	40		

Dart Aerospace Ltd

W/O:		WORK ORDER CHANGES					
DATE	STEP	PROCEDURE CHANGE	By	Date	Qty	Approval Chief Eng / Prod Mgr	Approval QC Inspector

Part No: _____ **PAR #:** _____ **Fault Category:** _____ **NCR:** Yes No **DQA:** _____ **Date:** _____

Resolution: _____ **Disposition:** _____ **QA: N/C Closed:** _____ **Date:** _____

NCR:		WORK ORDER NON-CONFORMANCE (NCR)						
DATE	STEP	Description of NC Section A	Corrective Action Section B			Verification Section C	Approval Chief Eng	Approval QC Inspector
			Initial Chief Eng	Action Description Chief Eng	Sign & Date			

NOTE: Date & initial all entries

H:\fFORMS\Quality Assurance\approved QA\NCRWO RevE

Picklist Print

Thursday, July 15, 2010 10:24:12 AM

Work Order ID: 60607

Parent Item: D206-642-541

Parent Item Name: Replacement Skidtube

Start Date: 7/15/2010 **Required Date:** 7/22/2010

Start Qty: 1.00 **Required Qty:** 1.00

D3536-23	Manufactured	No	270	Each	6.0000	1	1		
Gasket									

Location	Loc Qty	Loc Code
FP011	6	B60234
58819	6	

D3536-35	Manufactured	No	270	Each	11.0000	1	1		
Gasket									

Location	Loc Qty	Loc Code
FP012	11	B60235
58683	11	

D3536-39	Manufactured	No	270	Each	21.0000	1	1		
Gasket									

Location	Loc Qty	Loc Code
FP12	21	
58215	7	
58571	14	

D3535-15	Manufactured	No	270	Each	10.0000	1	1		
Wearshoe									

Location	Loc Qty	Loc Code
FP18	10	
59236	10	

D3535-35	Manufactured	No	270	Each	7.0000	1	1		
Wearshoe									

B60232

Location	Loc Qty	Loc Code
FP018	7	
59237	7	

Dart Aerospace Ltd

W/O:		WORK ORDER CHANGES					
DATE	STEP	PROCEDURE CHANGE	By	Date	Qty	Approval Chief Eng / Prod Mgr	Approval QC Inspector

Part No: _____ **PAR #:** _____ **Fault Category:** _____ **NCR:** Yes No **DQA:** _____ **Date:** _____

Resolution: _____ **Disposition:** _____ **QA: N/C Closed:** _____ **Date:** _____

NCR:		WORK ORDER NON-CONFORMANCE (NCR)						
DATE	STEP	Description of NC Section A	Corrective Action Section B			Verification Section C	Approval Chief Eng	Approval QC Inspector
			Initial Chief Eng	Action Description Chief Eng	Sign & Date			

NOTE: Date & initial all entries

H:\fFORMS\Quality Assurance\approved QA\NCRWO RevE

Picklist Print

Thursday, July 15, 2010 10:24:12 AM

Work Order ID: 60607

Parent Item: D206-642-541

Parent Item Name: Replacement Skidtube

Start Date: 7/15/2010 **Required Date:** 7/22/2010

Start Qty: 1.00 **Required Qty:** 1.00

CCR264SS3-3 Cherry Rivet	Purchased	No	250	Each	540.0000	2	2	10/09/08

Location	Loc Qty	Loc Code	
ST311	540		
112314	4		
113539	60		
113973	476		X2

ALS4-1032-130 Insert	Purchased	No	250	Each	4,506.000	78	78	10/09/08

Location	Loc Qty	Loc Code	
PKG11	4190		
114723	4190		X78
ST282	277		
110511	38		
114407	239		
ST381	39		
114654	39		

D3536-15 Gasket	Manufactured	No	270	Each	13.0000	1	1	10/09/08

Location	Loc Qty	Loc Code	
FP	6		
56055	6		
FP11	7		
59238	7		X1

Dart Aerospace Ltd

W/O:		WORK ORDER CHANGES					
DATE	STEP	PROCEDURE CHANGE	By	Date	Qty	Approval Chief Eng / Prod Mgr	Approval QC Inspector

Part No: _____ **PAR #:** _____ **Fault Category:** _____ **NCR:** Yes No **DQA:** _____ **Date:** _____

Resolution: _____ **Disposition:** _____ **QA: N/C Closed:** _____ **Date:** _____

NCR:		WORK ORDER NON-CONFORMANCE (NCR)						
DATE	STEP	Description of NC Section A	Corrective Action Section B			Verification Section C	Approval Chief Eng	Approval QC Inspector
			Initial Chief Eng	Action Description Chief Eng	Sign & Date			

NOTE: Date & initial all entries

H:\fFORMS\Quality Assurance\approved QA\NCRWO RevE

Picklist Print

Thursday, July 15, 2010 10:24:12 AM

Work Order ID: 60607

Parent Item: D206-642-541

Parent Item Name: Replacement Skidtube

Start Date: 7/15/2010 **Required Date:** 7/22/2010

Start Qty: 1.00 **Required Qty:** 1.00

D2649	Manufactured	No	190	Each	69.0000	1	1	
Cross Bolt Spacer								

Location	Loc Qty	Loc Code
LG	69	
58545	69	

B60652 ×12 BE 10/07/29

D3275-1	Manufactured	No	190	Each	17.0000	12	12	
Crossbolt Spacer								

Location	Loc Qty	Loc Code
LG	17	
53453	8	
57513	9	

B60653 ×12 BE 10/07/29

CR3212-4-03	Purchased	No	250	Each	3,739.000	2	2	
Cherry Rivet								

ll 10/09/08

Location	Loc Qty	Loc Code
ST311	3739	
111359	5	
112314	30	
114436	1142	
114450	564	
114859	1998	

X2

D3415-041	Manufactured	No	250	Each	61.0000	1	1	
Nut Plate								

ll 10/09/08

Location	Loc Qty	Loc Code
ST056	61	
33842	61	

X1

Dart Aerospace Ltd

W/O:		WORK ORDER CHANGES					
DATE	STEP	PROCEDURE CHANGE	By	Date	Qty	Approval Chief Eng / Prod Mgr	Approval QC Inspector

Part No: _____ **PAR #:** _____ **Fault Category:** _____ **NCR:** Yes No **DQA:** _____ **Date:** _____

Resolution: _____ **Disposition:** _____ **QA: N/C Closed:** _____ **Date:** _____

NCR:		WORK ORDER NON-CONFORMANCE (NCR)						
DATE	STEP	Description of NC Section A	Corrective Action Section B			Verification Section C	Approval Chief Eng	Approval QC Inspector
			Initial Chief Eng	Action Description Chief Eng	Sign & Date			

NOTE: Date & initial all entries

H:\fFORMS\Quality Assurance\approved QA\NCRWO RevE

Picklist Print

Thursday, July 15, 2010 10:24:12 AM

Work Order ID: 60607

Parent Item: D206-642-541

Parent Item Name: Replacement Skidtube

Start Date: 7/15/2010 **Required Date:** 7/22/2010

Start Qty: 1.00 **Required Qty:** 1.00

Comments:
IPP Rev:B□05.09.23□Revised per D206-642 Rev. J□KJ/JLM
IPP Rev:C 07-02-23 Added SS Wearplates & Gaskets JLM□
IPP Rev:D 07-12-06 replace NAS1515H3L to D3672-1 DD
IPP Rev:E 08-04-17 as per PAR 08-015 DD verified by:EC
IPP Rev:F 08-06-02 add comment DD verified by:EC
IPP Rev:G 08-10-09 revise details DD verified byEC

Component Item ID/ Item Name	Replacement Item ID	Mfg/ Purch	Bin Item	Primary Location	Last Location	Route Seq ID	Unit of Measure	Qty on Hand	Qty per Kit	Total Qty	Qty Issued	Date Issued	Status
D2600-1-190		Manufactured	No			110	Each	32.0000	1	1			
Extrusion Round 3" 206													
				Location			**Loc Qty**		**Loc Code**				
				LG			32						
				47575			32						
D3285-1		Manufactured	No			110	Each	149.0000	1	1			
Cap													
				Location			**Loc Qty**		**Loc Code**				
				LG			149						
					52511		74						
					52647		75						
D3282-041		Manufactured	No			150	Each	9.0000	1	1			
Float Web (206L/407)													
				Location			**Loc Qty**		**Loc Code**				
				LG			9						
					59886		9						

DD 10-7-20

BE 10/07/21

M 10/7/21

Dart Aerospace Ltd

W/O:		WORK ORDER CHANGES					
DATE	STEP	PROCEDURE CHANGE	By	Date	Qty	Approval Chief Eng / Prod Mgr	Approval QC Inspector

Part No: _____ **PAR #:** _____ **Fault Category:** _____ **NCR:** Yes No **DQA:** _____ **Date:** _____

Resolution: _____ **Disposition:** _____ **QA: N/C Closed:** _____ **Date:** _____

NCR:		WORK ORDER NON-CONFORMANCE (NCR)						
DATE	STEP	Description of NC Section A	Corrective Action Section B			Verification Section C	Approval Chief Eng	Approval QC Inspector
			Initial Chief Eng	Action Description Chief Eng	Sign & Date			

NOTE: Date & initial all entries

H:\fFORMS\Quality Assurance\approved QA\NCRWO RevE

Work Order ID 60607

Thursday, July 15, 2010 10:24:08 AM

Item ID: D206-642-541 **Accept** **Setup Start**

Revision ID: **Stop**

Item Name: Replacement Skidtube

Start Date: 7/15/2010 **Start Qty:** 1.00 **Cust Item ID:**

Required Date: 7/22/2010 **Req'd Qty:** 1.00 **Customer:**

Reference:

Run Start

Approvals: **Process Plan:** _____ **Date:** _____ **Tooling:** _____ **Date:** _____

Stop

QC: _____ **Date:** _____ **SPC (Y/N):** _____ **Date:** _____

Sequence ID/ Work Center ID	Operation Description	Set Up/ Run Hours	Tool ID	Tool #	Plan Code	Accept Qty	Reject Qty	Reject Number	Insp. Stamp
290	Identify as per dwg & Stock Location:_____	0.00							
Packaging									
Packaging	Memo PPP 60602	0.00					7/15/10		C
300	QC21- Final Inspection - Work Order Release	0.00							
QC							10/09/13		
Quality Control	Memo	0.00					CL 10/9/13		

Dart Aerospace Ltd

W/O:		WORK ORDER CHANGES					
DATE	STEP	PROCEDURE CHANGE	By	Date	Qty	Approval Chief Eng / Prod Mgr	Approval QC Inspector

Part No: _____ **PAR #:** _____ **Fault Category:** _____ **NCR:** Yes No **DQA:** _____ **Date:** _____

Resolution: _____ **Disposition:** _____ **QA: N/C Closed:** _____ **Date:** _____

NCR:		WORK ORDER NON-CONFORMANCE (NCR)						
DATE	STEP	Description of NC Section A	Corrective Action Section B			Verification Section C	Approval Chief Eng	Approval QC Inspector
			Initial Chief Eng	Action Description Chief Eng	Sign & Date			

NOTE: Date & initial all entries

H:\fFORMS\Quality Assurance\approved QA\NCRWO RevE

Work Order ID 60607

Thursday, July 15, 2010 10:24:08 AM

Item ID: D206-642-541 **Accept** **Setup Start**

Revision ID: **Stop**

Item Name: Replacement Skidtube

Start Date: 7/15/2010 **Start Qty:** 1.00 **Cust Item ID:**

Required Date: 7/22/2010 **Req'd Qty:** 1.00 **Customer:**

Reference:

Approvals: **Process Plan:** _____ **Date:** _____ **Tooling:** _____ **Date:** _____ **Run Start**

QC: _____ **Date:** _____ **SPC (Y/N):** _____ **Date:** _____ **Stop**

Sequence ID/ Work Center ID	Operation Description	Set Up/ Run Hours	Tool ID	Tool #	Plan Code	Accept Qty	Reject Qty	Reject Number	Insp. Stamp
270 HandFinish Hand Finishing	HAND FINISHING RESOURCE #1	0.00				1	0		
	Memo	0.00							
	1-Install wearpads & gaskets as per Dwg D3274.								
	2-Install ring as per Dwg D3274 A/R□□Sikaflex-291 □ NN115164 Sikaflex expire date: □ 11/10								
	3-Inspect for foreign objects as per QSI 024								
	4-Spray inside of tube on both sides of web with LPS-3 A/R LPS-3 Batch: N/A								
	5-Install Aft Cap and seal with Sikaflex. Clean excess adhesive. A/R□□Sikaflex-291 □ NN115044 Sikaflex expire date: □ 11/10								
280 QC Quality Control	QC5- Inspect part completeness to step on W/O	0.00				X1			
	Memo	0.00							

Dart Aerospace Ltd

W/O:		WORK ORDER CHANGES					
DATE	STEP	PROCEDURE CHANGE	By	Date	Qty	Approval Chief Eng / Prod Mgr	Approval QC Inspector

Part No: _____ **PAR #:** _____ **Fault Category:** _____ **NCR:** Yes No **DQA:** _____ **Date:** _____

Resolution: _____ **Disposition:** _____ **QA: N/C Closed:** _____ **Date:** _____

NCR:		WORK ORDER NON-CONFORMANCE (NCR)						
DATE	STEP	Description of NC Section A	Corrective Action Section B			Verification Section C	Approval Chief Eng	Approval QC Inspector
			Initial Chief Eng	Action Description Chief Eng	Sign & Date			

NOTE: Date & initial all entries

H:\fFORMS\Quality Assurance\approved QA\NCRWO RevE

Work Order ID 60607

Thursday, July 15, 2010 10:24:08 AM

Item ID: D206-642-541 **Accept** **Setup Start**

Revision ID: **Stop**

Item Name: Replacement Skidtube

Start Date: 7/15/2010 **Start Qty:** 1.00 **Cust Item ID:**

Required Date: 7/22/2010 **Req'd Qty:** 1.00 **Customer:**

Reference:

Approvals: **Process Plan:** _____ **Date:** _____ **Tooling:** _____ **Date:** _____ **Run Start**

QC: _____ **Date:** _____ **SPC (Y/N):** _____ **Date:** _____ **Stop**

Sequence ID/ Work Center ID	Operation Description	Set Up/ Run Hours	Tool ID	Tool #	Plan Code	Accept Qty	Reject Qty	Reject Number	Insp. Stamp
240 QC Quality Control	QC3- Inspect Part Finish **Memo**	0.00 0.00	=> BR 10/09/08			1	0		
250 HandFinish Hand Finishing	HandFinishing **Memo** 1-Install Nut Plate as per Dwg D3274. Apply LPS-3 to Nut Plate and rivets. A/R☐N/A☐LPS-3☐ M109956 2-Install inserts as per Dwg D3274. Use a drop of Sikaflex inside insert holes a A/R☐☐Sikaflex-291 ☐ M115114 Sikaflex expire date: ☐ 11/01	0.00 0.00	=> M 10/09/08			x	1		
260 QC Quality Control	QC5- Inspect part completeness to step on W/O **Memo** Inspect Nut Plate & Inserts	0.00 0.00	S 10/09/08			1			

Dart Aerospace Ltd

W/O:		WORK ORDER CHANGES					
DATE	STEP	PROCEDURE CHANGE	By	Date	Qty	Approval Chief Eng / Prod Mgr	Approval QC Inspector

Part No: _____ **PAR #:** _____ **Fault Category:** _____ **NCR:** Yes No **DQA:** _____ **Date:** _____

Resolution: _____ **Disposition:** _____ **QA: N/C Closed:** _____ **Date:** _____

NCR:		WORK ORDER NON-CONFORMANCE (NCR)						
DATE	STEP	Description of NC Section A	Corrective Action Section B			Verification Section C	Approval Chief Eng	Approval QC Inspector
			Initial Chief Eng	Action Description Chief Eng	Sign & Date			

NOTE: Date & initial all entries

H:\fFORMS\Quality Assurance\approved QA\NCRWO RevE

Work Order ID 60607

Thursday, July 15, 2010 10:24:08 AM

Item ID: D206-642-541 **Accept** **Setup Start** **Stop**

Revision ID:

Item Name: Replacement Skidtube

Start Date: 7/15/2010 **Start Qty:** 1.00 **Cust Item ID:**

Required Date: 7/22/2010 **Req'd Qty:** 1.00 **Customer:**

Reference:

Run Start **Stop**

Approvals: **Process Plan:** _____ **Date:** _____ **Tooling:** _____ **Date:** _____

QC: _____ **Date:** _____ **SPC (Y/N):** _____ **Date:** _____

Sequence ID/ Work Center ID	Operation Description	Set Up/ Run Hours	Tool ID	Tool #	Plan Code	Accept Qty	Reject Qty	Reject Number	Insp. Stamp
210 QC Quality Control	QC10- Inspect visual per QSI004- ground welds	0.00							
	Memo	0.00							
220 HandFinish Hand Finishing	Pressure Wash per QSI005 4.3	0.00				1	0		
	Memo Re-alodine tube as per QSI 005 section 4.1.2.1 do not acid etch	0.00							
230 Powdercoat Powder Coating	White Gloss(Ref:4.3.5.1) per QSI005 4.3-Alum M115291	0.00				1	0		
	Memo START TIME: 2:00pm OVEN TEMPERATURE: 320°F FINISH TIME: 2:30pm	0.00							

Dart Aerospace Ltd

W/O:		WORK ORDER CHANGES					
DATE	STEP	PROCEDURE CHANGE	By	Date	Qty	Approval Chief Eng / Prod Mgr	Approval QC Inspector

Part No: _____ **PAR #:** _____ **Fault Category:** _____ **NCR:** Yes No **DQA:** _____ **Date:** _____

Resolution: _____ **Disposition:** _____ **QA: N/C Closed:** _____ **Date:** _____

NCR:		WORK ORDER NON-CONFORMANCE (NCR)						
DATE	STEP	Description of NC Section A	Corrective Action Section B			Verification Section C	Approval Chief Eng	Approval QC Inspector
			Initial Chief Eng	Action Description Chief Eng	Sign & Date			

NOTE: Date & initial all entries

H:\fFORMS\Quality Assurance\approved QA\NCRWO RevE

Work Order ID 60607

Thursday, July 15, 2010 10:24:08 AM

Item ID: D206-642-541 **Accept** **Setup Start**

Revision ID: **Stop**

Item Name: Replacement Skidtube

Start Date: 7/15/2010 **Start Qty:** 1.00 **Cust Item ID:**

Required Date: 7/22/2010 **Req'd Qty:** 1.00 **Customer:**

Reference:

Approvals: **Process Plan:** _____ **Date:** _____ **Tooling:** _____ **Date:** _____ **Run Start**

QC: _____ **Date:** _____ **SPC (Y/N):** _____ **Date:** _____ **Stop**

Sequence ID/ Work Center ID	Operation Description	Set Up/ Run Hours	Tool ID	Tool #	Plan Code	Accept Qty	Reject Qty	Reject Number	Insp. Stamp
190	Skidtubes	0.00							
Skidtubes									
Skidtubes	**Memo**	0.00							
	1-Insert D2649 & D3275-1 crossbolt spacers. Weld as per QSI 004 and Dwg D3274. Remember to back drill each hole before welding the other side. Use aluminum rod A/R□□Aluminum Rod□ M112507 BE 10/07/29 3-Grind cross bolt welds flush as per Dwg D3274. 4-Counterbore 5/16" x 0.750" deep as per Dwg D3274 and deburr. BE 10/08/03								
200	QC5- Inspect part completeness to step on W/O	0.00							
QC	**Memo**	0.00							
Quality Control									

S 10/08/04

KO

Dart Aerospace Ltd

W/O:		WORK ORDER CHANGES					
DATE	STEP	PROCEDURE CHANGE	By	Date	Qty	Approval Chief Eng / Prod Mgr	Approval QC Inspector

Part No: _____ **PAR #:** _____ **Fault Category:** _____ **NCR:** Yes No **DQA:** _____ **Date:** _____

Resolution: _____ **Disposition:** _____ **QA: N/C Closed:** _____ **Date:** _____

NCR:		WORK ORDER NON-CONFORMANCE (NCR)						
DATE	STEP	Description of NC Section A	Corrective Action Section B			Verification Section C	Approval Chief Eng	Approval QC Inspector
			Initial Chief Eng	Action Description Chief Eng	Sign & Date			

NOTE: Date & initial all entries

H:\fFORMS\Quality Assurance\approved QA\NCRWO RevE

Work Order ID 60607

Thursday, July 15, 2010 10:24:08 AM

Item ID: D206-642-541 **Accept** **Setup Start**

Revision ID: **Stop**

Item Name: Replacement Skidtube

Start Date: 7/15/2010 **Start Qty:** 1.00 **Cust Item ID:**

Required Date: 7/22/2010 **Req'd Qty:** 1.00 **Customer:**

Reference:

Approvals: **Process Plan:** _____ **Date:** _____ **Tooling:** _____ **Date:** _____ **Run Start**

QC: _____ **Date:** _____ **SPC (Y/N):** _____ **Date:** _____ **Stop**

Sequence ID/ Work Center ID	Operation Description	Set Up/ Run Hours	Tool ID	Tool #	Plan Code	Accept Qty	Reject Qty	Reject Number	Insp. Stamp
170		0.00							
Skidtubes	Skidtubes								
Skidtubes	**Memo**	0.00							
	1-Bend AFT end of tube using bend prog. D3274 AFT as per dwg D3274. Install drop pins in crossbolt spacer holes to maintain web position.								
	2- DRILL PILOT HOLES FOR WEARPLATES USING D3274-1T2 OPEN HOLES TO .297" . Deburr								
	3-DRILL TOE PIN HOLE .640" DIA AS PER DWG USING DT8935 FWD END OF TUBE DEBURR INSIDE OF HOLE AS NECESSARY (DO NOT ENLARGE HOLES) REMOVE ANY FOREIGN OBJECTS INSIDE OF TUBES								
	4- Countersink crossbolt spacer holes as per Dwg D3274								
	5- prepare for welding								
180	QC5- Inspect part completeness to step on W/O	0.00							
QC	**Memo**	0.00							
Quality Control									

MB 10-07-28

BE 10/07/28

h=3.06" L°=4.7° S 10/07/29

Dart Aerospace Ltd

W/O:		WORK ORDER CHANGES					
DATE	STEP	PROCEDURE CHANGE	By	Date	Qty	Approval Chief Eng / Prod Mgr	Approval QC Inspector

Part No: _____ **PAR #:** _____ **Fault Category:** _____ **NCR:** Yes No **DQA:** _____ **Date:** _____

Resolution: _____ **Disposition:** _____ **QA: N/C Closed:** _____ **Date:** _____

NCR:		WORK ORDER NON-CONFORMANCE (NCR)						
DATE	STEP	Description of NC Section A	Corrective Action Section B			Verification Section C	Approval Chief Eng	Approval QC Inspector
			Initial Chief Eng	Action Description Chief Eng	Sign & Date			

NOTE: Date & initial all entries

H:\fFORMS\Quality Assurance\approved QA\NCRWO RevE

Work Order ID 60607

Thursday, July 15, 2010 10:24:08 AM

Item ID: D206-642-541 **Accept** **Setup Start** **Stop**

Revision ID:

Item Name: Replacement Skidtube

Start Date: 7/15/2010 **Start Qty:** 1.00 **Cust Item ID:**

Required Date: 7/22/2010 **Req'd Qty:** 1.00 **Customer:**

Reference:

Approvals: **Process Plan:** _____ **Date:** _____ **Tooling:** _____ **Date:** _____ **Run Start** **Stop**

QC: _____ **Date:** _____ **SPC (Y/N):** _____ **Date:** _____

Sequence ID/ Work Center ID	Operation Description	Set Up/ Run Hours	Tool ID	Tool #	Plan Code	Accept Qty	Reject Qty	Reject Number	Insp. Stamp
150		0.00							
Skidtubes	Skidtubes								
Skidtubes	**Memo**	0.00							
	1-Open Ø0.313" and 0.375" crossbolt spacer holes using DT8743 as per Dwg D3274 2-Deburr crossbolt spacer holes as per Dwg D3274 and blow out chips from inside the tube 3-Bond web in place as per Dwg D3274 & QSI 015. A/R□□Sikaflex-291□ M115114 □□ Sikaflex expire date:□ 11/1/30 □ Start:□ 10/7/27 □Time:□ 8:30 am □ Finish:□ 10/7/26 □Time:□ 10:00am (Adhere for 12 hours)				M 10/7/21				
160	QC5- Inspect part completeness to step on W/O	0.00				(x)			
QC	**Memo**	0.00							
Quality Control									

Dart Aerospace Ltd

W/O:		WORK ORDER CHANGES					
DATE	STEP	PROCEDURE CHANGE	By	Date	Qty	Approval Chief Eng / Prod Mgr	Approval QC Inspector

Part No: _____ **PAR #:** _____ **Fault Category:** _____ **NCR:** Yes No **DQA:** _____ **Date:** _____

Resolution: _____ **Disposition:** _____ **QA: N/C Closed:** _____ **Date:** _____

NCR:		WORK ORDER NON-CONFORMANCE (NCR)						
DATE	STEP	Description of NC Section A	Corrective Action Section B			Verification Section C	Approval Chief Eng	Approval QC Inspector
			Initial Chief Eng	Action Description Chief Eng	Sign & Date			

NOTE: Date & initial all entries

H:\fFORMS\Quality Assurance\approved QA\NCRWO RevE

Work Order ID 60607

Thursday, July 15, 2010 10:24:08 AM

Item ID: D206-642-541 **Accept** **Setup Start** **Stop**

Revision ID:

Item Name: Replacement Skidtube

Start Date: 7/15/2010 **Start Qty:** 1.00 **Cust Item ID:**

Required Date: 7/22/2010 **Req'd Qty:** 1.00 **Customer:**

Reference:

Approvals: **Process Plan:** _____ **Date:** _____ **Tooling:** _____ **Date:** _____ **Run Start** **Stop**

QC: _____ **Date:** _____ **SPC (Y/N):** _____ **Date:** _____

Sequence ID/ Work Center ID	Operation Description	Set Up/ Run Hours	Tool ID	Tool #	Plan Code	Accept Qty	Reject Qty	Reject Number	Insp. Stamp
120 HandFinish Hand Finishing	Chemical Conversion Coat per QSI005 4.1	0.00				1	M 10/7/26		
	Memo	0.00							
130 QC Quality Control	QC3- Inspect Part Finish	0.00							
	Memo	0.00	S 10/07/26						
140 QC Quality Control	QC5- Inspect part completeness to step on W/O	0.00							
	Memo	0.00	S 10/07/26			(H)			

Dart Aerospace Ltd

W/O:		WORK ORDER CHANGES					
DATE	STEP	PROCEDURE CHANGE	By	Date	Qty	Approval Chief Eng / Prod Mgr	Approval QC Inspector

Part No: _____ **PAR #:** _____ **Fault Category:** _____ **NCR:** Yes No **DQA:** _____ **Date:** _____

Resolution: _____ **Disposition:** _____ **QA: N/C Closed:** _____ **Date:** _____

NCR:		WORK ORDER NON-CONFORMANCE (NCR)						
DATE	STEP	Description of NC Section A	Corrective Action Section B			Verification Section C	Approval Chief Eng	Approval QC Inspector
			Initial Chief Eng	Action Description Chief Eng	Sign & Date			

NOTE: Date & initial all entries

H:\fFORMS\Quality Assurance\approved QA\NCRWO RevE

Work Order ID 60607

Thursday, July 15, 2010 10:24:08 AM

Item ID: D206-642-541 **Accept** **Setup Start** **Stop**

Revision ID:

Item Name: Replacement Skidtube

Start Date: 7/15/2010 **Start Qty:** 1.00 **Cust Item ID:**

Required Date: 7/22/2010 **Req'd Qty:** 1.00 **Customer:**

Reference:

Approvals: **Process Plan:** _____ **Date:** _____ **Tooling:** _____ **Date:** _____ **Run Start** **Stop**

QC: _____ **Date:** _____ **SPC (Y/N):** _____ **Date:** _____

Sequence ID/ Work Center ID	Operation Description	Set Up/ Run Hours	Tool ID	Tool #	Plan Code	Accept Qty	Reject Qty	Reject Number	Insp. Stamp
110		0.00							
Skidtubes	Skidtubes								
Skidtubes	**Memo**	0.00							

****VERIFY AND INSPECT THE MATERIAL PRIOR TO USE****

1- Bend FWD end of tube using bend prog D3274 FWD and foilo 10 as per dwg D3274, cut fwd end of tube with saw table setup D3274. 10-7-20

2- remove fwd indexing ridge as per dwg D3274. Prepare for welding

3- weld fwd cap as per dwg D3274 and QSI004
AR Aluminum Rod Batch: M112507 / M114242 BE 10/07/21

4- grind fwd cap weld on top surface only BE 10/07/21

5- Cut AFT end of tube at 170.9" as per dwg D3274 and deburr end.

6-Drill Aft cap pilot hole using DT8025

-Cleco DT8025 in position and install pilot hole drill Jig DT8742A,B,C,D. Drill 3/16" pilot holes as per Dwg D3274

8 -Remove inner indexing ridge on aft end of skidtube as per Dwg D3274 scribe batch #

9 -Open aft end cap holes to Ø0.208" as per Dwg D3274. Deburr aft end.

BE 10/07/21

Dart Aerospace Ltd

W/O:		WORK ORDER CHANGES					
DATE	STEP	PROCEDURE CHANGE	By	Date	Qty	Approval Chief Eng / Prod Mgr	Approval QC Inspector

Part No: _____ **PAR #:** _____ **Fault Category:** _____ **NCR:** Yes No **DQA:** _____ **Date:** _____

Resolution: _____ **Disposition:** _____ **QA: N/C Closed:** _____ **Date:** _____

NCR:		WORK ORDER NON-CONFORMANCE (NCR)						
DATE	STEP	Description of NC Section A	Corrective Action Section B			Verification Section C	Approval Chief Eng	Approval QC Inspector
			Initial Chief Eng	Action Description Chief Eng	Sign & Date			

NOTE: Date & initial all entries

H:\fFORMS\Quality Assurance\approved QA\NCRWO RevE

Work Order ID 60607

Thursday, July 15, 2010 10:24:08 AM

Item ID: D206-642-541 **Accept** **Setup Start**

Revision ID: **Stop**

Item Name: Replacement Skidtube

Start Date: 7/15/2010 **Start Qty:** 1.00 **Cust Item ID:**

Required Date: 7/22/2010 **Req'd Qty:** 1.00 **Customer:**

Reference:

Approvals: **Process Plan:** RL **Date:** 10-7-15 **Tooling:** _____ **Date:** _____ **Run Start**

QC: _____ **Date:** _____ **SPC (Y/N):** _____ **Date:** _____ **Stop**

Sequence ID/ Work Center ID	Operation Description	Set Up/ Run Hours	Tool ID	Tool #	Plan Code	Accept Qty	Reject Qty	Reject Number	Insp. Stamp
Draw Nbr	**Revision Nbr**								
D3274	D								
IIN-D206-642	Rev M								
100		0.00							
DC	DOCUMENT CONTROL								
Document Control	**Memo**	0.00							
	Photocopy bluefile & type labels per PPP D206-642-541		CHG003						

N/A